MURR ELEKTRONIK
stay connected

## M8 FEMALE 0° SHIELDED

601 PVC 4x0.34 shielded bk UL/ 15.0

Female straight
M8, 4-pole
shielded
Further cable lengths on request.
Plastic housings with good resistance against chemicals and oils.
The resistance to aggressive media should be individually tested for your application. Further details on request.

### Illustration

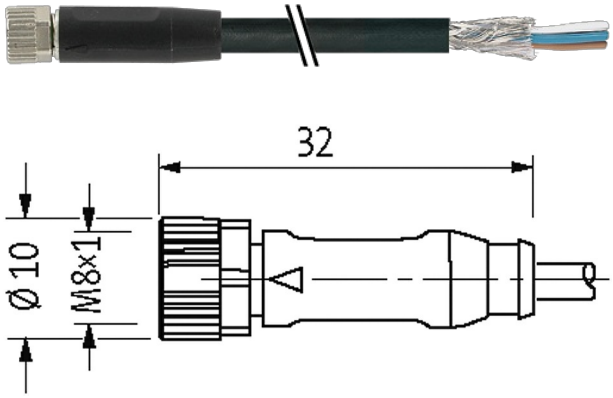


Product may differ from Image

### Approvals

| | | |
|---|---|---|
| c UL us Listed * | * only for products with UL/CSA approved cable | cCSAus |

### Form

| | |
|---|---|
| Form | 08761 |

### General data

| | |
|---|---|
| Standards | DIN EN 61076-2-104 (M8) |
| Pollution Degree | 3 |
| Temperature range | -25...+85 °C, depending on cable quality |

### Cables

| | |
|---|---|
| No./diameter of wires | 4× 0.34 mm² |
| Wire isolation | PVC (br, wh, bl, bk) |
| Material (jacket) | PVC (UL/CSA) |
| Outer Ø | 5.3 mm ±5% |
| Temperature range (fixed) | -30...+80 °C |
| Temperature range (mobile) | -5...+80 °C |
| Cable identification | 601 |
| Cable Type | 1 (PVC) |
| Approval (cable) | UL (AWM-Style 2464/1731), CSA |
| Cable weight [g/m] | 58,30 |
| Material (wire) | Cu wire, bare |
| Resistor (core) | max. 57 Ω/km (20 °C) |

The information in this brochure has been compiled with the utmost care.
Liability for the correctness completeness and topicality of the information is restricted to gross negligence. Version: 10/20

| | |
|---|---|
| Single wire Ø (core) | 0.15 mm |
| Construction (core) | 19× 0.15 mm (multi-strand wire class 5) |
| Diameter (core) | 4× 0.34 mm² |
| AWG | similar to AWG 22 |
| Material (wire isolation) | PVC |
| Material property (wire isolation) | CFC-, cadmium-, silicone- and lead-free, matt, low-adhesion, machine easy to process, abrasion-resistant |
| Shore hardness (wire isolation) | 45 ±5 D |
| Wire-Ø incl. isolation | 1.25 mm ±5% |
| Color/numbering of wires | br, bk, bl, wh |
| Stranding combination | 4 wires twisted |
| Shield | yes |
| | min. 80% |
| Material (jacket) | PVC |
| Material property (jacket) | CFC-, cadmium-, silicone- and lead-free, matt, low-adhesion, machine easy to process, abrasion-resistant |
| Shore hardness (jacket) | 85 ±5 A |
| Outer-Ø (jacket) | 5.3 mm ±5% |
| Color (jacket) | black |
| chemical resistance | good resistance to oil, gasoline and chemicals |
| thermal resistance | flame retardant UL 1581 VW1 / CSA FT1 |
| Nominal voltage | 300 V AC |
| Test voltage | 2000 V AC |
| Current load capacity | to DIN VDE 0298-4 |
| Temperature range (fixed) | -30...+80 °C |
| Temperature range (mobile) | -5...+80 °C |
| Bend radius (fixed) | 10× outer Ø |
| Jacket Color | black |
| **Technical Data** | |
| Operating voltage | max. 50 V AC/60 V DC |
| Rated surge voltage | 0.8 kV |
| Operating current per contact | max. 4 A |
| Material group | IEC 60664-1, category I |
| Locking of ports | Screw thread (M8×1 mm) recommended torque 0.4 Nm, self-securing |
| Compression gland | M8 (SW9) |
| Protection | IP65, IP66K, IP67 inserted and tightened (EN 60529) |
| Locking material | Zinc die casting, nickel-plated |
| Material | PUR |
| **Commercial data** | |
| country of origin | DE |
| customs tariff number | 85444290 |
| EAN | 4048879787383 |
| eClass | 27279218 |
| Packaging unit | 1 |
| **Sketch** | |

The information in this brochure has been compiled with the utmost care.
Liability for the correctness completeness and topicality of the information is restricted to gross negligence. Version: 10/20

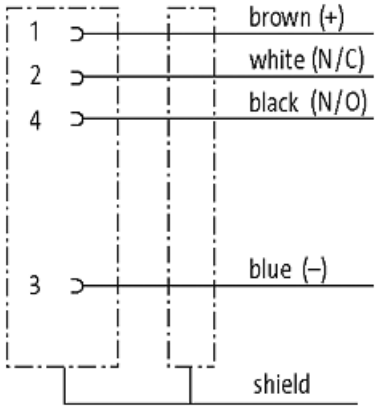


Female

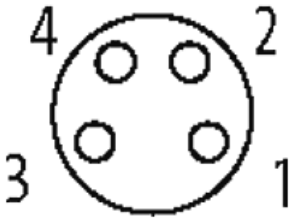


Product may differ from Image

The information in this brochure has been compiled with the utmost care.
Liability for the correctness completeness and topicality of the information is restricted to gross negligence. Version: 10/20